Please check the examination details below before entering your candidate information

Candidate surname	Other names

Centre Number | Candidate Number

Pearson Edexcel Level 1/Level 2 GCSE (9–1)

Monday 16 June 2025

Morning (Time: 1 hour 45 minutes)

Paper reference **1PH0/2F**

Physics
PAPER 2

Foundation Tier

You must have:
Calculator, ruler, Equation Booklet (enclosed)

Total Marks

Instructions

- Use **black** ink or ball-point pen.
- **Fill in the boxes** at the top of this page with your name, centre number and candidate number.
- Answer **all** questions.
- Answer the questions in the spaces provided – *there may be more space than you need.*
- Calculators may be used.
- Any diagrams may NOT be accurately drawn, unless otherwise indicated.
- You must show **all your working out** with **your answer clearly identified** at the end of your solution.

Information

- The total mark for this paper is 100.
- The marks for **each** question are shown in brackets – *use this as a guide as to how much time to spend on each question.*
- In questions marked with an **asterisk (*)**, marks will be awarded for your ability to structure your answer logically, showing how the points that you make are related or follow on from each other where appropriate.

Advice

- Read each question carefully before you start to answer it.
- Try to answer every question.
- Check your answers if you have time at the end.

Turn over

©2025 Pearson Education Ltd.
Y:1/1/1/1/1/1/1/1/1/1/1/1/1/

P 7 8 7 3 2 R A 0 1 3 6

Pearson

DO NOT WRITE IN THIS AREA

DO NOT WRITE IN THIS AREA

DO NOT WRITE IN THIS AREA

BLANK PAGE

DO NOT WRITE IN THIS AREA
DO NOT WRITE IN THIS AREA
DO NOT WRITE IN THIS AREA

Answer ALL questions. Write your answers in the spaces provided.

Some questions must be answered with a cross in one of the four boxes ☒. If you change your mind about an answer, put a line through the box ☒ and then mark your new answer with a cross ☒.

1 (a) Figure 1 shows two lamps in series in a circuit.

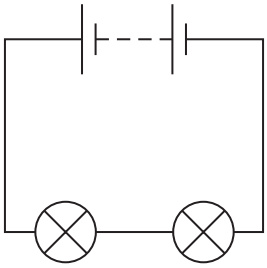

Figure 1

The resistance of each lamp is 12 Ω.

(i) Calculate the total resistance of the lamps in the circuit.

(1)

total resistance of lamps = ... Ω

(ii) The current in a lamp in Figure 1 is 0.50 A.

The resistance of the lamp is 12 Ω.

Calculate the voltage across this lamp.

Use the equation

$$V = I \times R$$

(2)

voltage = ... V

(iii) The voltage across a different lamp is 4.5 V.

The current in this lamp is 0.40 A.

Calculate the energy transferred to the lamp in 5 minutes.

Use the equation

$$E = I \times V \times t$$

(3)

energy transferred = ... J

(b) Figure 2 shows a circuit with a switch, two ammeters and two resistors in series with a cell.

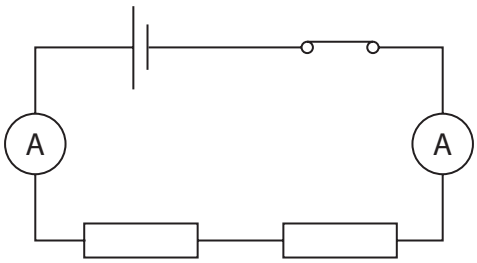

Figure 2

(i) Which of these statements is true for the circuit in Figure 2?

(1)

☒ **A** the switch is in the open position

☒ **B** the ammeters measure the current in the circuit

☒ **C** the resistors are variable resistors

☒ **D** the current supplied by the cell is alternating current (a.c.)

DO NOT WRITE IN THIS AREA
DO NOT WRITE IN THIS AREA
DO NOT WRITE IN THIS AREA

DO NOT WRITE IN THIS AREA
DO NOT WRITE IN THIS AREA
DO NOT WRITE IN THIS AREA

(ii) The resistance of the circuit is increased by adding one resistor to the circuit.

State how increasing the resistance changes the current in the circuit.

(1)

.....

.....

(Total for Question 1 = 8 marks)

2 (a) Which of these forces keeps the Moon in orbit around the Earth?

(1)

☒ **A** gravitational

☒ **B** friction

☒ **C** electrostatic

☒ **D** contact

(b) (i) Figure 3 shows a rock and a long lever.

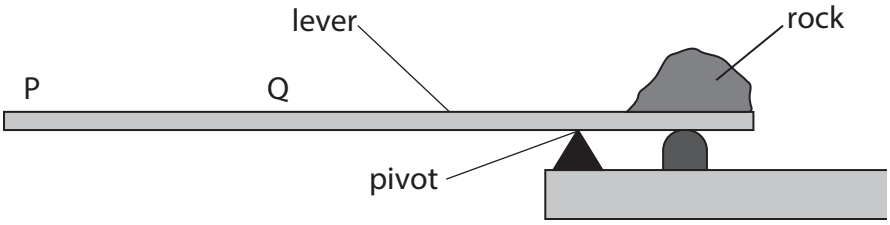

Figure 3

The lever is used to try to move the rock.

The lever is pushed downwards at Q with a force of 375 N.
Q is 1.4 m from the pivot.

Calculate the moment of the force at Q about the pivot.

Use the equation

moment of a force = force × distance from pivot

(2)

moment of force = ... Nm

DO NOT WRITE IN THIS AREA
DO NOT WRITE IN THIS AREA
DO NOT WRITE IN THIS AREA

DO NOT WRITE IN THIS AREA
DO NOT WRITE IN THIS AREA
DO NOT WRITE IN THIS AREA

(ii) When the force of 375 N is pushed down at Q, the rock does not move.

Explain why pushing down at P with a force of 375 N may be more successful in moving the rock.

(2)

.....

.....

.....

.....

(c) Figure 4 shows a uniform ruler that can rotate about a pivot.
The ruler is balanced by adding weights to each side.

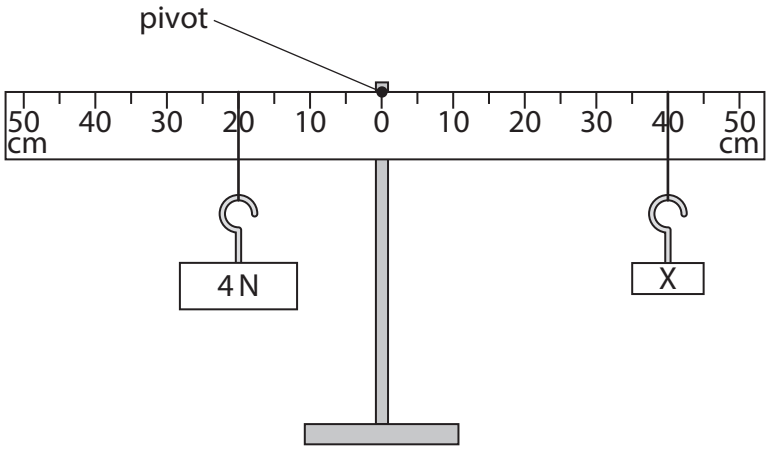

Figure 4

Calculate the value of X, the unknown weight, that keeps the ruler balanced.

(2)

X = ... N

(Total for Question 2 = 7 marks)

3 (a) Figure 5 shows water coming out of holes in the side of a can.

The holes are at different heights.

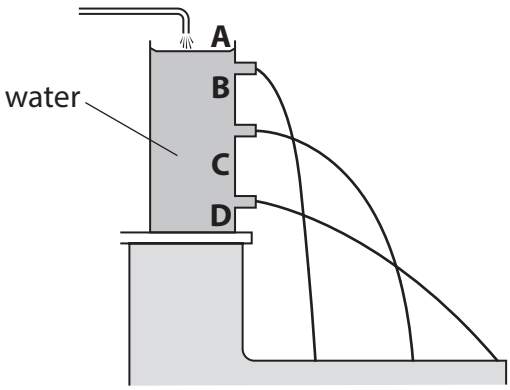

Figure 5

At which of these points is the pressure the lowest?

(1)

☒ **A**

☒ **B**

☒ **C**

☒ **D**

(b) A student wants to find the pressure they exert on the floor.

The student starts by standing on a piece of squared paper and drawing around the base of their shoe, as shown in Figure 6.

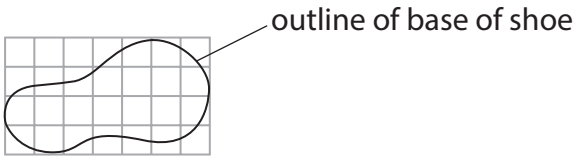

Figure 6

The area of each square is 25 cm^2.

The student estimates that the base of the shoe covers about 12 squares.

(i) Use this estimate to calculate the area of the base of the shoe.

(2)

area of base of shoe = ... cm^2

DO NOT WRITE IN THIS AREA
DO NOT WRITE IN THIS AREA
DO NOT WRITE IN THIS AREA

DO NOT WRITE IN THIS AREA
DO NOT WRITE IN THIS AREA
DO NOT WRITE IN THIS AREA

(ii) Suggest **one** change that could be made to the squared paper so that the student can give a better estimate of the area of the base of the shoe.

(1)

.....

.....

(iii) The total area of the base of a student's shoes is 0.031 m^2.

The weight of the student is 680 N.

Calculate the pressure that the student exerts on the ground.

State the unit.

Use the equation

$$P = \frac{F}{A}$$

(3)

pressure = ... unit .....

(c) Figure 7 shows a person wearing snowshoes.

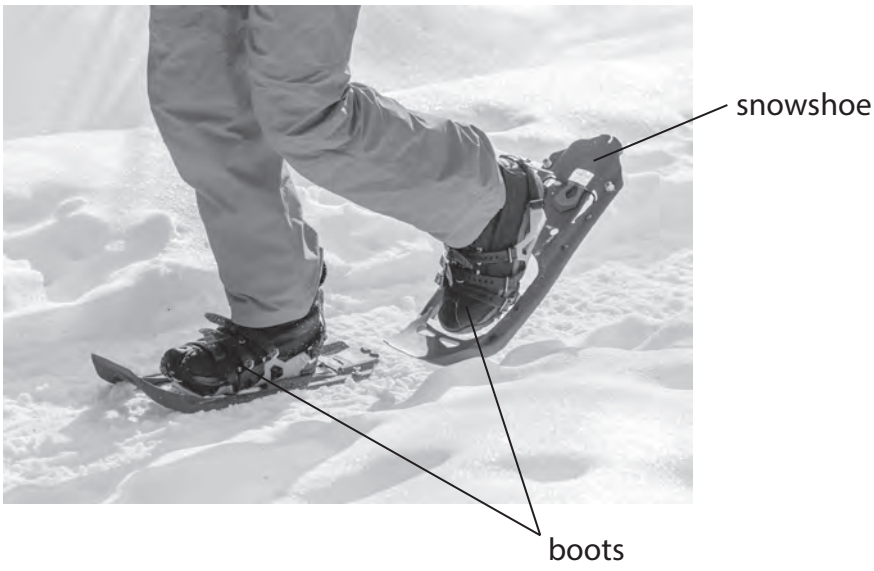

(Source: Pearson Asset Library)

Figure 7

Snow shoes are designed for walking on deep, soft snow.

Explain why they are better suited for this than boots.

(2)

.....

.....

.....

.....

(Total for Question 3 = 9 marks)

DO NOT WRITE IN THIS AREA
DO NOT WRITE IN THIS AREA
DO NOT WRITE IN THIS AREA

DO NOT WRITE IN THIS AREA
DO NOT WRITE IN THIS AREA
DO NOT WRITE IN THIS AREA

4 (a) Which of these describes the motion of particles in a liquid?

(1)

☒ **A** particles move around and are very close together

☒ **B** particles move very quickly and are a long way apart

☒ **C** particles do not move and are a long way apart

☒ **D** particles vibrate about fixed positions

(b) A student is asked to find the density of a metal key.

Figure 8 shows a metal key and some apparatus.

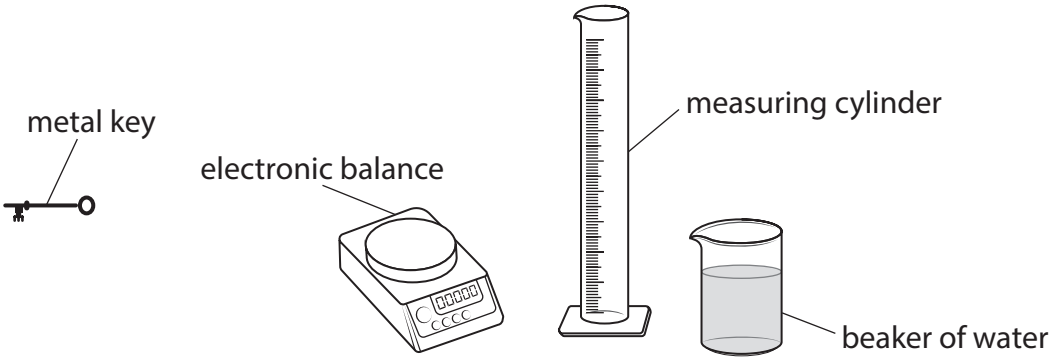

Figure 8

Using the apparatus shown in Figure 8, describe how the student can find the density of the metal key.

$$\text{density} = \frac{\text{mass}}{\text{volume}}$$

(4)

.....

.....

.....

.....

.....

.....

.....

.....

.....

(c) (i) A student heats an aluminium block, as shown in Figure 9.

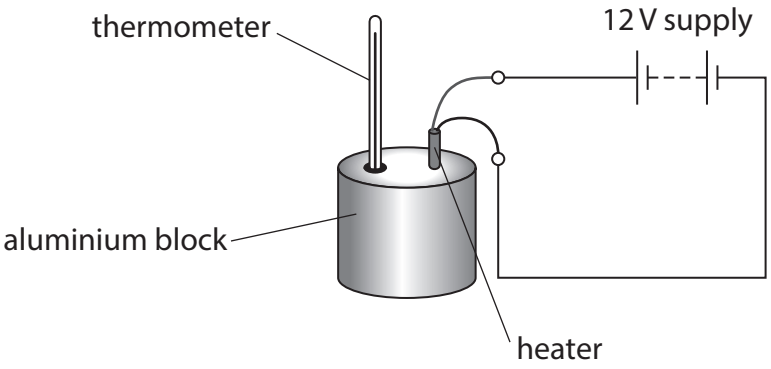

Figure 9

The aluminium block has a mass of 0.96 kg.

The specific heat capacity of aluminium is 920 J / kg °C.

The temperature of the block increases from 18 °C to 35 °C.

Calculate the change in thermal energy of the aluminium block.

Use the equation

change in thermal energy = mass × specific heat capacity × change in temperature

(2)

change in thermal energy = ... J

DO NOT WRITE IN THIS AREA
DO NOT WRITE IN THIS AREA
DO NOT WRITE IN THIS AREA

DO NOT WRITE IN THIS AREA
DO NOT WRITE IN THIS AREA
DO NOT WRITE IN THIS AREA

(ii) Suggest **one** way the student could reduce the energy loss from the aluminium block during the experiment.

(1)

.....

.....

(iii) The thermometer does not show the maximum temperature reached by the aluminium block until some time after the heater is switched off.

Give **one** reason for this.

(1)

.....

.....

(Total for Question 4 = 9 marks)

5 (a) Which of these is a magnetic material?

(1)

☒ **A** aluminium

☒ **B** plastic

☒ **C** steel

☒ **D** lead

(b) Figure 10 shows two magnetic poles facing each other.

There is a uniform magnetic field between the poles.

Draw field lines, on Figure 10, to show the uniform part of the magnetic field. At least one line must have an arrow on it to indicate the direction of the magnetic field.

(2)

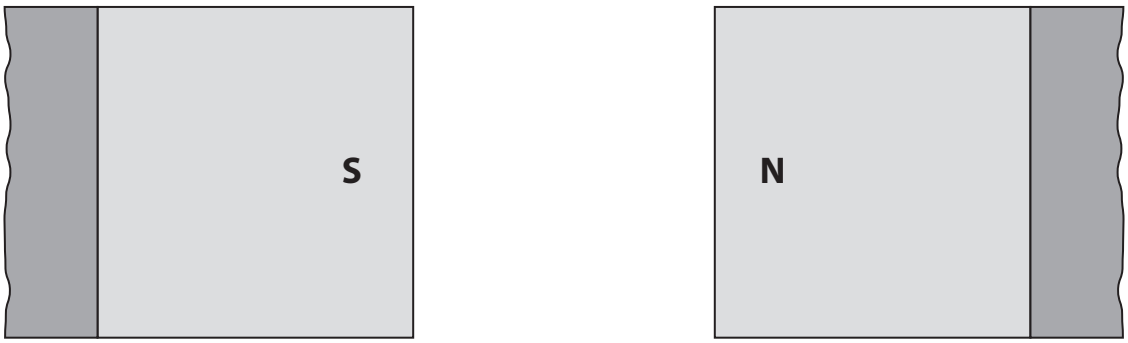

Figure 10

DO NOT WRITE IN THIS AREA
DO NOT WRITE IN THIS AREA
DO NOT WRITE IN THIS AREA

DO NOT WRITE IN THIS AREA
DO NOT WRITE IN THIS AREA
DO NOT WRITE IN THIS AREA

(c) Figure 11 shows the magnetic field around a bar magnet.

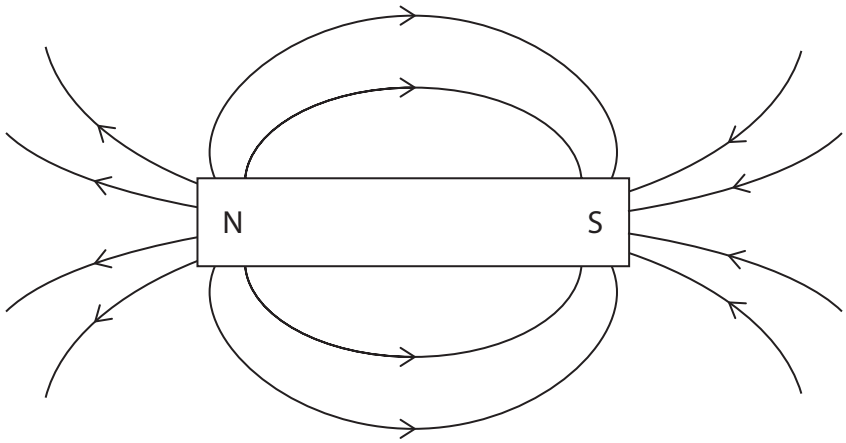

Figure 11

Iron filings are sprinkled onto the magnet.

(i) On Figure 11, draw an X where most of the iron filings will stick.

(1)

(ii) Explain why most of the iron filings will stick to the point you have labelled with an X.

(2)

.....

.....

.....

.....

(d) One use of a magnet is in a plotting compass.

(i) Explain how a plotting compass can be used to show that the Earth has a magnetic field.

(2)

.....

.....

.....

.....

(ii) State the name of a device that uses a permanent magnet.

(1)

.....

.....

(Total for Question 5 = 9 marks)

DO NOT WRITE IN THIS AREA DO NOT WRITE IN THIS AREA DO NOT WRITE IN THIS AREA

DO NOT WRITE IN THIS AREA
DO NOT WRITE IN THIS AREA
DO NOT WRITE IN THIS AREA

BLANK PAGE

6 (a) Bending or stretching objects can cause distortions.

Which of these small distortions can be described as **inelastic**?

(1)

☒ **A** stretching a rubber band

☒ **B** squashing a piece of modelling clay

☒ **C** compressing a steel spring

☒ **D** bending a plastic ruler

(b) Figure 12 shows what happens when weights are added to the end of a wooden strip.

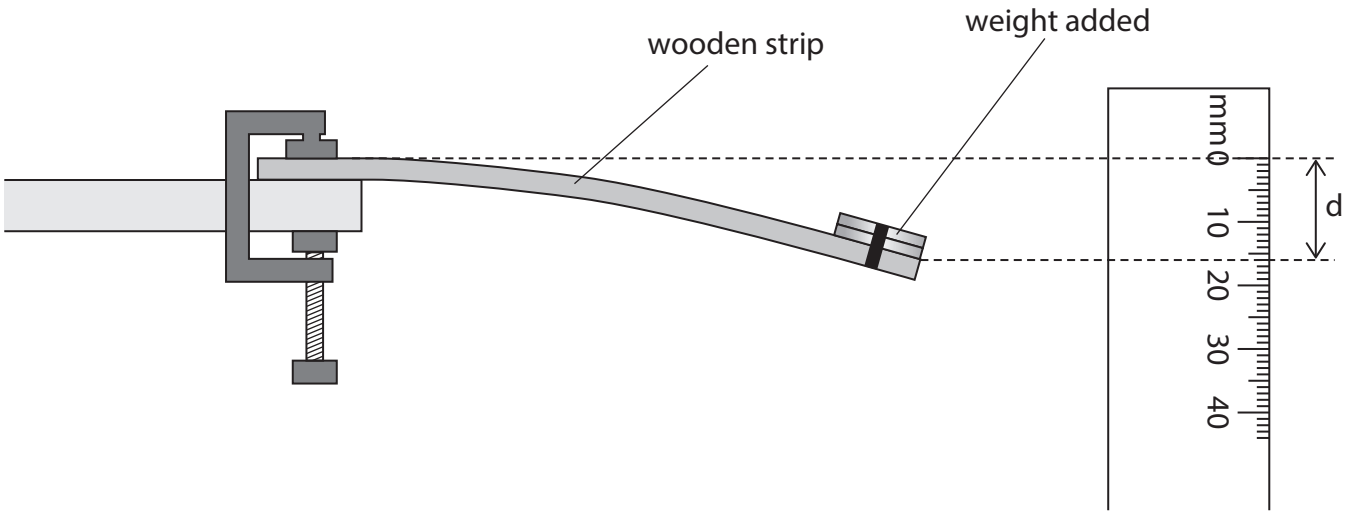

Figure 12

(Source: https://www.schoolphysics.co.uk/age16-19/Mechanics/Simple%20harmonic%20motion/text/Vibrating_cantilever/index.html)

DO NOT WRITE IN THIS AREA
DO NOT WRITE IN THIS AREA
DO NOT WRITE IN THIS AREA

DO NOT WRITE IN THIS AREA
DO NOT WRITE IN THIS AREA
DO NOT WRITE IN THIS AREA

The end of the strip of wood moves down by a distance, d, as shown in Figure 12.

(i) Describe how a student could investigate how the distance, d, depends on the weight added to the wooden strip.

(4)

.....

.....

.....

.....

.....

.....

.....

.....

(ii) A student conducts a second experiment with the same equipment where they decide to keep the size of the weight constant.

State another variable, other than the weights added, that would affect the distance, d.

(1)

.....

.....

(c) (i) Figure 13 shows a spring stretched by some weights.

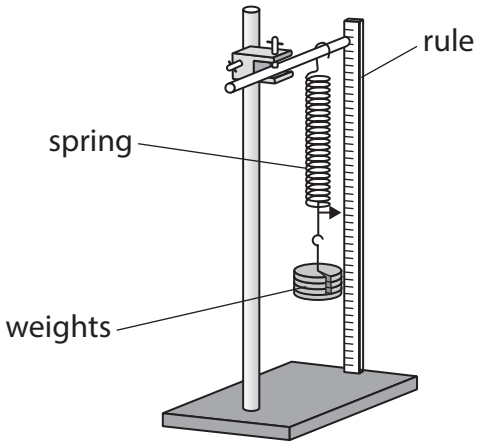

Figure 13

The extension of the spring is 6.2 cm when a weight of 2 N is added.

Calculate the spring constant, k, of the spring.

Use the equation

$$k = \frac{F}{x}$$

(2)

spring constant, k = ... N / m

DO NOT WRITE IN THIS AREA
DO NOT WRITE IN THIS AREA
DO NOT WRITE IN THIS AREA

DO NOT WRITE IN THIS AREA
DO NOT WRITE IN THIS AREA
DO NOT WRITE IN THIS AREA

(ii) Work is done when a spring is stretched.

A different spring has a spring constant of 25 N / m.

The spring is stretched by 0.06 m.

Calculate the energy transferred by stretching the spring.

Use the equation

$$E = \frac{1}{2} \times k \times x^2$$

(2)

energy transferred = ... J

(Total for Question 6 = 10 marks)

DO NOT WRITE IN THIS AREA

DO NOT WRITE IN THIS AREA

DO NOT WRITE IN THIS AREA

BLANK PAGE

DO NOT WRITE IN THIS AREA
DO NOT WRITE IN THIS AREA
DO NOT WRITE IN THIS AREA

7 (a) Figure 14 is a graph of atmospheric pressure against height above the surface of the Earth.

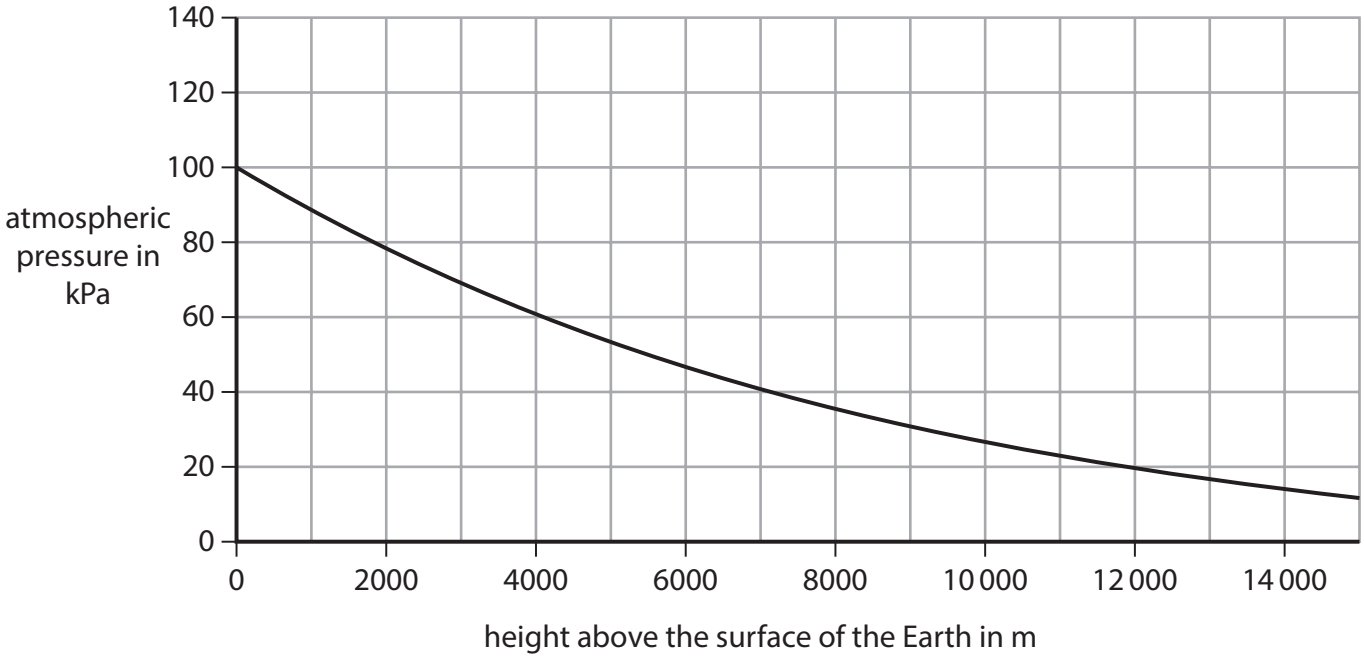

Figure 14

(i) The atmospheric pressure at 3000 m above the surface of the Earth, as shown in Figure 14, is

(1)

☒ **A** 80 kPa

☒ **B** 70 kPa

☒ **C** 60 kPa

☒ **D** 50 kPa

(ii) Use Figure 14 to describe how the atmospheric pressure depends on the height above the surface of the earth.

(2)

.....

.....

.....

.....

(b) Figure 15 shows an oxygen cylinder used to provide patients with oxygen in hospital.

(Source: Pearson Asset Library)

Figure 15

The volume of the cylinder, V_1, is 2.3 litres.

The pressure of gas in the cylinder, P_1, is 15 MPa.

Oxygen is released from the cylinder to the patient at a pressure of $P_2 = 0.35$ MPa.

(i) Show that the total volume, V_2, of oxygen that can be released to the patient is about 100 litres at this pressure.

Use the equation

$$V_2 = \frac{P_1 \times V_1}{P_2}$$

(2)

DO NOT WRITE IN THIS AREA
DO NOT WRITE IN THIS AREA
DO NOT WRITE IN THIS AREA

DO NOT WRITE IN THIS AREA
DO NOT WRITE IN THIS AREA
DO NOT WRITE IN THIS AREA

(ii) The oxygen from the cylinder flows to the patient at 6 litres / minute.

Calculate the time taken for the 100 litres of oxygen to be used up at this rate.

(1)

time taken ..... minutes

(iii) A patient requires oxygen for a longer period of time.

Suggest what could be done to supply oxygen over this longer period of time.

(1)

.....

.....

*(c) Figure 16 shows a cylinder containing some gas.

A piston prevents the gas escaping.

In Figure 16x a small weight pushes down and the volume and pressure of the gas are measured.

Following this, in Figure 16y, a larger weight pushes down and the volume and pressure of the gas are measured again.

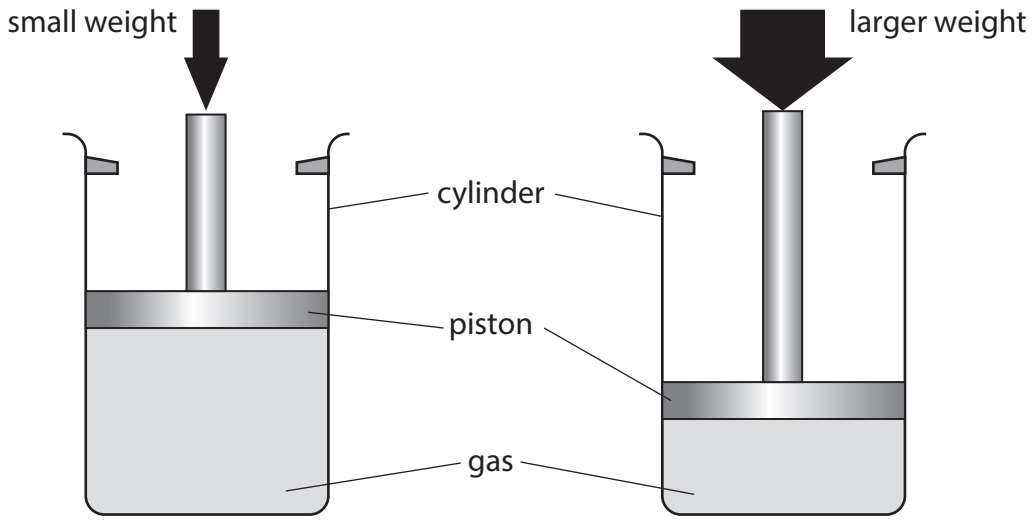

Figure 16x **Figure 16y**

Explain why the pressure and volume of the gas in the cylinder change when the larger weight pushes down on the piston.
The temperature of the gas does not change.

Your answer should include

- how the volume and pressure change
- how the gas particles exert a force on the piston

(6)

.....

.....

.....

.....

.....

.....

.....

.....

DO NOT WRITE IN THIS AREA
DO NOT WRITE IN THIS AREA
DO NOT WRITE IN THIS AREA

DO NOT WRITE IN THIS AREA
DO NOT WRITE IN THIS AREA
DO NOT WRITE IN THIS AREA

.....

.....

.....

.....

(Total for Question 7 = 13 marks)

8 (a) A student places a trolley at the top of a runway, as shown in Figure 17.

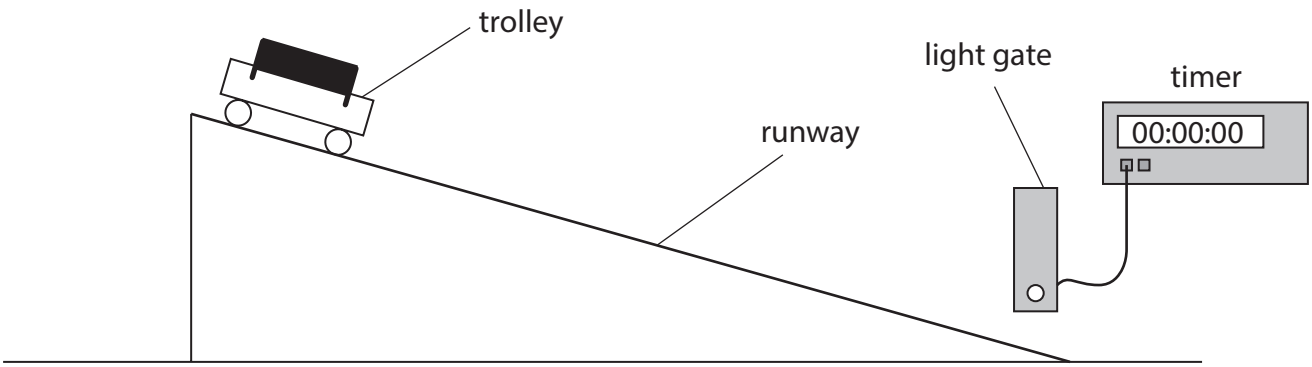

Figure 17

The student had to lift the trolley through a height of 26 cm to put it at the top of the runway.

The gravitational potential energy, ΔGPE, of the trolley increases by 4.1 J when lifted to the top of the runway.

The gravitational field strength, g, = 10 N / kg.

(i) Show that the mass of the trolley is about 1.6 kg.

Use the equation

$$m = \frac{\Delta GPE}{g \times \Delta h}$$

(2)

DO NOT WRITE IN THIS AREA
DO NOT WRITE IN THIS AREA
DO NOT WRITE IN THIS AREA

DO NOT WRITE IN THIS AREA
DO NOT WRITE IN THIS AREA
DO NOT WRITE IN THIS AREA

(ii) The student releases the trolley and the trolley moves down the runway.

The student assumes that all the extra gravitational potential energy, ΔGPE, stored at the top of the runway is transferred to kinetic energy at the end of the runway.

Calculate the expected value of the velocity of the trolley at the end of the runway.

Use the equation

$$v^2 = \frac{2 \times \Delta GPE}{m}$$

(3)

expected velocity = ... m / s

(iii) The light gate, shown in Figure 17, is used to determine the actual velocity of the trolley at the end of the runway.

The actual velocity at the end of the runway is less than the expected velocity as calculated in part (ii).

Suggest **one** way to reduce the difference between the actual velocity and the expected velocity.

(1)

.....

.....

(b) (i) A different student finds out how much power can be generated by running up some stairs in a measured amount of time.

The following quantities are measured:

mass of student = 48 kg

total height of stairs = 2.9 m

time to run up stairs = 3.4 s

Calculate the power the student generated.

Give the answer to 2 significant figures (2 s.f.).

Use the equation

$$\text{power} = \frac{\text{weight of student} \times \text{height of stairs}}{\text{time to run up stairs}}$$

(3)

power = ... W

(ii) Explain how the total height of the stairs can be found using a 50 cm ruler.

(2)

.....

.....

.....

.....

(Total for Question 8 = 11 marks)

DO NOT WRITE IN THIS AREA DO NOT WRITE IN THIS AREA DO NOT WRITE IN THIS AREA

DO NOT WRITE IN THIS AREA
DO NOT WRITE IN THIS AREA
DO NOT WRITE IN THIS AREA

9 (a) State the frequency of the supply of electricity to homes in the UK (United Kingdom).

(1)

frequency = ... Hz

(b) The mains supply to the television is 230 V.

The current supplied to the television is 0.53 A.

Calculate the power input to the television.

Use the equation

$$P = I \times V$$

(2)

power = ... W

(c) A plug connects a television to the mains supply.

(i) The plug contains a fuse that is connected to the

(1)

☒ **A** live pin

☒ **B** negative pin

☒ **C** neutral pin

☒ **D** positive pin

(ii) A 3 A fuse is used in the plug.

Explain what happens if a fault causes the current to rise to more than 3 A.

(2)

.....

.....

.....

.....

(iii) A fuse is a safety device.

State **one** other safety device that can be used in domestic electrical wiring.

(1)

.....

.....

*(d) Figure 18 is a diagram showing a part of the National Grid, used to supply electrical power to homes.

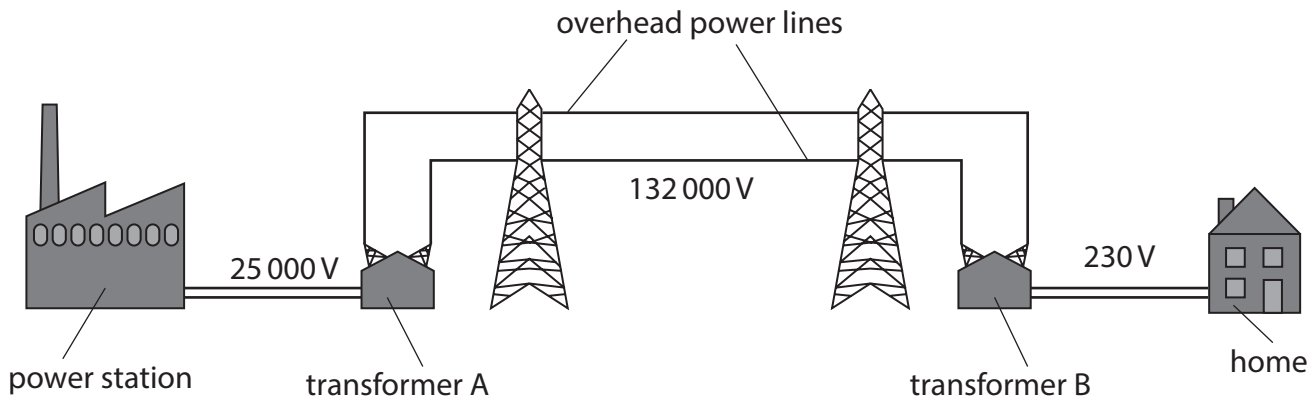

Figure 18

Using information from Figure 18, explain how electrical power is distributed from power stations to homes.

Your answer should refer to

- the role of the transformers
- the different voltages
- how energy losses are reduced

(6)

Answer lines for this question are on page 33.

DO NOT WRITE IN THIS AREA
DO NOT WRITE IN THIS AREA
DO NOT WRITE IN THIS AREA

DO NOT WRITE IN THIS AREA
DO NOT WRITE IN THIS AREA
DO NOT WRITE IN THIS AREA

(Total for Question 9 = 13 marks)

10 (a) Figure 19 shows **two** metal plates.

The plates are charged by a very high voltage (potential difference).

Draw, on Figure 19, the shape and direction of the electric field between the two plates.

(2)

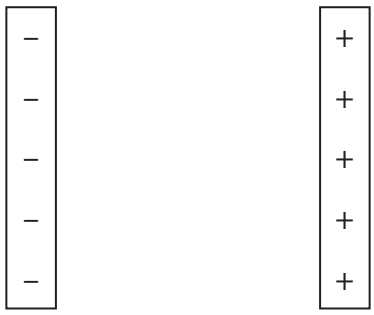

Figure 19

(b) Figure 20 shows a device that removes small particles of soot from sooty air.

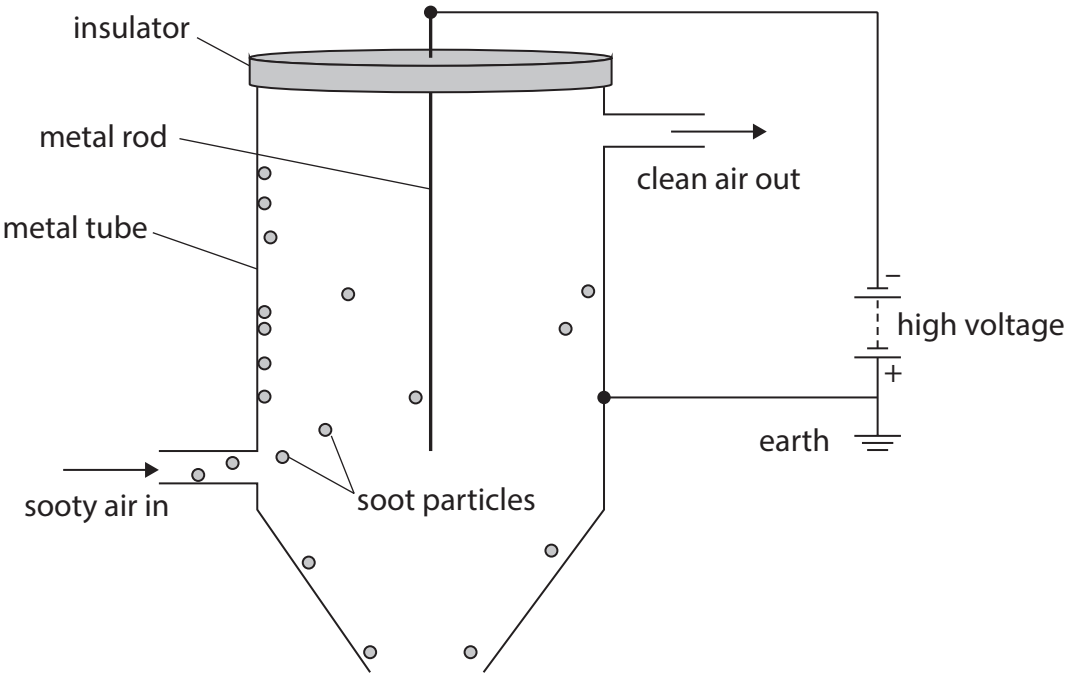

Figure 20

DO NOT WRITE IN THIS AREA
DO NOT WRITE IN THIS AREA
DO NOT WRITE IN THIS AREA

DO NOT WRITE IN THIS AREA
DO NOT WRITE IN THIS AREA
DO NOT WRITE IN THIS AREA

(i) There is a large potential difference between the metal tube and the metal rod in the centre of the tube.

This large potential difference causes the soot particles to gain a negative charge as they pass between the rod and the tube.

The soot particles have

(1)

☒ **A** lost protons

☒ **B** lost electrons

☒ **C** gained protons

☒ **D** gained electrons

(ii) Explain why, in Figure 20, the charged soot particles move towards the metal tube.

(2)

.....

.....

.....

.....

(iii) When the soot particles reach the metal tube, the charge on them changes.

State how the charge on them changes.

(1)

.....

.....

(iv) The metal tube does not become charged when the soot particles reach it.

Explain why the metal tube does not become charged.

(2)

.....

.....

.....

.....

(c) There is a current of 2.5 mA in a circuit.

Calculate the amount of charge that moves past a point in the circuit in 80 seconds.

State the unit of charge.

(3)

charge = ... unit .....

(Total for Question 10 = 11 marks)

TOTAL FOR PAPER = 100 MARKS

DO NOT WRITE IN THIS AREA
DO NOT WRITE IN THIS AREA
DO NOT WRITE IN THIS AREA

Pearson Edexcel Level 1/Level 2 GCSE (9–1)

Monday 16 June 2025

Paper reference **1PH0/2F**

Physics
PAPER 2

Foundation Tier

Equation Booklet
Do not return this Booklet with the question paper.

Turn over

P78732RA

©2025 Pearson Education Ltd.
Y:1/1/1/1/1/1/1/1/1/1/1/1/1/1/

P 7 8 7 3 2 R A

Pearson

If you're taking **GCSE (9–1) Combined Science** or **GCSE (9–1) Physics**, you will need these equations:

HT = higher tier

	distance travelled = average speed × time	
	acceleration = change in velocity ÷ time taken	$a = \frac{(v-u)}{t}$
	force = mass × acceleration	$F = m \times a$
	weight = mass × gravitational field strength	$W = m \times g$
HT	**momentum = mass × velocity**	$\boldsymbol{p = m \times v}$
	change in gravitational potential energy = mass × gravitational field strength × change in vertical height	$\Delta GPE = m \times g \times \Delta h$
	kinetic energy = 1/2 × mass × (speed)^2	$KE = \frac{1}{2} \times m \times v^2$
	efficiency = $\frac{(\text{useful energy transferred by the device})}{(\text{total energy supplied to the device})}$	
	wave speed = frequency × wavelength	$v = f \times \lambda$
	wave speed = distance ÷ time	$v = \frac{x}{t}$
	work done = force × distance moved in the direction of the force	$E = F \times d$
	power = work done ÷ time taken	$P = \frac{E}{t}$
	energy transferred = charge moved × potential difference	$E = Q \times V$
	charge = current × time	$Q = I \times t$
	potential difference = current × resistance	$V = I \times R$
	power = energy transferred ÷ time taken	$P = \frac{E}{t}$
	electrical power = current × potential difference	$P = I \times V$
	electrical power = (current)^2 × resistance	$P = I^2 \times R$
	density = mass ÷ volume	$\rho = \frac{m}{V}$

	force exerted on a spring = spring constant × extension	$F = k \times x$
	(final velocity)^2 – (initial velocity)^2 = 2 × acceleration × distance	$v^2 - u^2 = 2 \times a \times x$
HT	**force = change in momentum ÷ time**	$\boldsymbol{F = \frac{(mv - mu)}{t}}$
	energy transferred = current × potential difference × time	$E = I \times V \times t$
HT	**force on a conductor at right angles to a magnetic field carrying a current = magnetic flux density × current × length**	$\boldsymbol{F = B \times I \times l}$
	For transformers with 100% efficiency, potential difference across primary coil × current in primary coil = potential difference across secondary coil × current in secondary coil	$V_P \times I_P = V_S \times I_S$
	change in thermal energy = mass × specific heat capacity × change in temperature	$\Delta Q = m \times c \times \Delta\theta$
	thermal energy for a change of state = mass × specific latent heat	$Q = m \times L$
	energy transferred in stretching = 0.5 × spring constant × (extension)^2	$E = \frac{1}{2} \times k \times x^2$

If you're taking **GCSE (9–1) Physics**, you also need these extra equations:

	moment of a force = force × distance normal to the direction of the force	
	pressure = force normal to surface ÷ area of surface	$P = \frac{F}{A}$
HT	$\frac{\textit{potential difference across primary coil}}{\textit{potential difference across secondary coil}} = \frac{\textit{number of turns in primary coil}}{\textit{number of turns in secondary coil}}$	$\boldsymbol{\frac{V_p}{V_S} = \frac{N_p}{N_S}}$
	to calculate pressure or volume for gases of fixed mass at constant temperature	$P_1 \times V_1 = P_2 \times V_2$
HT	**pressure due to a column of liquid = height of column × density of liquid × gravitational field strength**	$\boldsymbol{P = h \times \rho \times g}$

END OF EQUATION LIST

BLANK PAGE